CONTROL No: 1311

REV.	DATE	ECO	DESCRIPTION	BY	CK	APP
-	9/22/10	N/A	INITIAL RELEASE	RB	NA	N/A

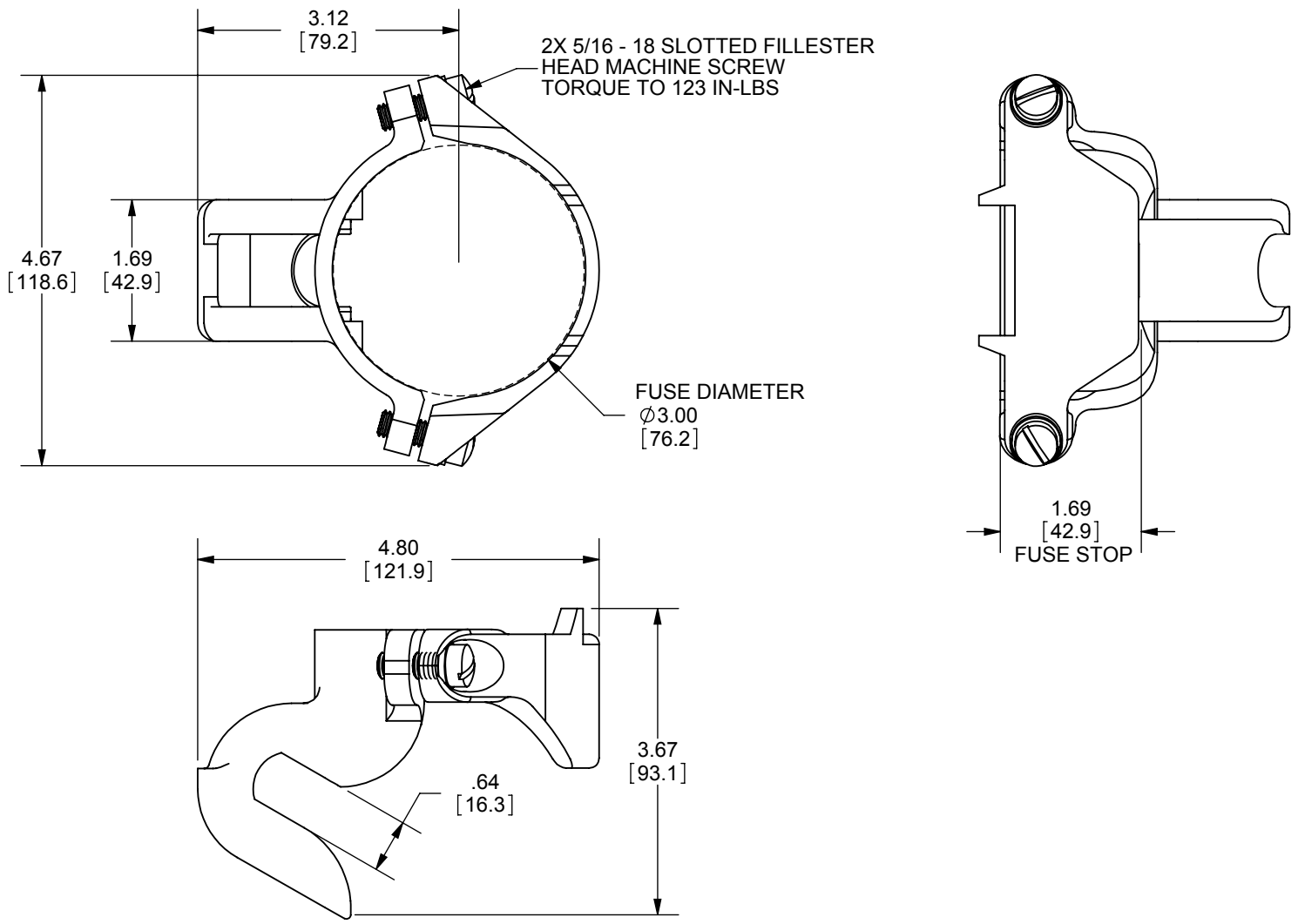

DIMENSIONS IN [ ] ARE MILLIMETERS

MERSEN

MERSEN USA NEWBURYPORT-MA, LLC
374 MERRIMAC STREET
NEWBURYPORT,MA 01950

9F61BLW399
3(2) HINGE TRUNION FD

OUTLINE DIMENSIONS
NOT TO BE USED FOR PRODUCTION

701545

SHEET 1 OF 1

PRODUCT MANAGER	DESIGN ENGINEER
SIGN:	SIGN:
DATE:	DATE: